Work Order ID 69671

Monday, May 16, 2011 9:27:16 AM

Item ID: D2807-041 **Accept** **Setup Start** **Stop**

Revision ID:

Item Name: Door prop

Start Date: 5/16/2011 **Start Qty:** 20.00 **Cust Item ID:**

Required Date: 5/20/2011 **Req'd Qty:** 20.00 **Customer:**

Reference:

Approvals: **Process Plan:** CL **Date:** 11/05/16 **Tooling:** _____ **Date:** _____ **Run Start** **Stop**

QC: _____ **Date:** _____ **SPC (Y/N):** _____ **Date:** _____

Sequence ID/ Work Center ID	Operation Description	Set Up/ Run Hours	Tool ID	Tool #	Plan Code	Accept Qty	Reject Qty	Reject Number	Insp. Stamp
Draw Nbr	**Revision Nbr**								
D2807	Rev E								
100	PURCHASING	0.00							
Purchasing						CL 11/05/16	(20)		
Purchasing	**Memo** Issue P/O: 14069 ☐Order as per Dwg D2807☐Possible supplier:Lift Support Technologies,Saskatoon,Canada☐P/N 6/15-164/50-115N ☐ Material release note is required	0.00							
110	Receive & Inspect for Damage & Mat'l Certs	0.00							
Packaging						[illegible] 11/05/15	(20)		
Packaging	**Memo** Ensure Material Release Note is attached	0.00							
120	QC6- Inspect dimensions to drawing	0.00							
QC		S 11/05/24				10 units (+20)			
Quality Control	**Memo**	0.00							

Dart Aerospace Ltd

W/O:		WORK ORDER CHANGES						
DATE	STEP	PROCEDURE CHANGE	By	Date	Qty	Approval Chief Eng / Prod Mgr	Approval QC Inspector

Part No: _____ **PAR #:** _____ **Fault Category:** _____ **NCR:** Yes No **DQA:** _____ **Date:** _____

Resolution: _____ **Disposition:** _____ **QA: N/C Closed:** _____ **Date:** _____

NCR:		WORK ORDER NON-CONFORMANCE (NCR)						
DATE	STEP	Description of NC Section A	Corrective Action Section B			Verification Section C	Approval Chief Eng	Approval QC Inspector
			Initial Chief Eng	Action Description Chief Eng	Sign & Date			

NOTE: Date & initial all entries

H:\FORMS\Quality Assurance\approved QA\NCRWO RevE

Work Order ID 69671

Monday, May 16, 2011 9:27:16 AM

Item ID: D2807-041 **Accept** **Setup Start**

Revision ID: **Stop**

Item Name: Door prop

Start Date: 5/16/2011 **Start Qty:** 20.00 **Cust Item ID:**

Required Date: 5/20/2011 **Req'd Qty:** 20.00 **Customer:**

Reference:

Run Start

Approvals: **Process Plan:** _____ **Date:** _____ **Tooling:** _____ **Date:** _____

Stop

QC: _____ **Date:** _____ **SPC (Y/N):** _____ **Date:** _____

Sequence ID/ Work Center ID	Operation Description	Set Up/ Run Hours	Tool ID	Tool #	Plan Code	Accept Qty	Reject Qty	Reject Number	Insp. Stamp
130		0.00							
Small Fab	Small Fab								
Small Fab	**Memo**	0.00							
Small Fab	1-install D3671-1 as per dwg D2807								
140	QC5- Inspect part completeness to step on W/O	0.00							
QC									
Quality Control	**Memo**	0.00							
150	Identify as per dwg & Stock Location: 22	0.00							
Packaging									
Packaging	**Memo**	0.00							

11/05/24 (22)

counted (20) 11/05/24

11/5/24 (22)

Dart Aerospace Ltd

W/O:		WORK ORDER CHANGES						
DATE	STEP	PROCEDURE CHANGE		By	Date	Qty	Approval Chief Eng / Prod Mgr	Approval QC Inspector

Part No: _____ **PAR #:** _____ **Fault Category:** _____ **NCR:** Yes No **DQA:** _____ **Date:** _____

Resolution: _____ **Disposition:** _____ **QA: N/C Closed:** _____ **Date:** _____

NCR:		WORK ORDER NON-CONFORMANCE (NCR)							
DATE	STEP	Description of NC Section A	Corrective Action Section B				Verification Section C	Approval Chief Eng	Approval QC Inspector
			Initial Chief Eng	Action Description Chief Eng		Sign & Date			

NOTE: Date & initial all entries

Work Order ID 69671

Monday, May 16, 2011 9:27:16 AM

Item ID: D2807-041 **Accept** **Setup Start**

Revision ID:

Item Name: Door prop **Stop**

Start Date: 5/16/2011 **Start Qty:** 20.00 **Cust Item ID:**

Required Date: 5/20/2011 **Req'd Qty:** 20.00 **Customer:**

Reference:

Approvals: **Process Plan:** _____ **Date:** _____ **Tooling:** _____ **Date:** _____ **Run Start**

QC: _____ **Date:** _____ **SPC (Y/N):** _____ **Date:** _____ **Stop**

Sequence ID/ Work Center ID	Operation Description	Set Up/ Run Hours	Tool ID	Tool #	Plan Code	Accept Qty	Reject Qty	Reject Number	Insp. Stamp
160	QC21- Final Inspection - Work Order Release	0.00							
QC	Memo	0.00							
Quality Control									

11/5/26

MF

11-05-25

Dart Aerospace Ltd

W/O:		WORK ORDER CHANGES						
DATE	STEP	PROCEDURE CHANGE		By	Date	Qty	Approval Chief Eng / Prod Mgr	Approval QC Inspector

Part No: _____ **PAR #:** _____ **Fault Category:** _____ **NCR:** Yes No **DQA:** _____ **Date:** _____

Resolution: _____ **Disposition:** _____ **QA: N/C Closed:** _____ **Date:** _____

NCR:		WORK ORDER NON-CONFORMANCE (NCR)							
DATE	STEP	Description of NC Section A	Corrective Action Section B				Verification Section C	Approval Chief Eng	Approval QC Inspector
			Initial Chief Eng	Action Description Chief Eng		Sign & Date			

NOTE: Date & initial all entries

Picklist Print

Monday, May 16, 2011 9:27:14 AM

Work Order ID: 69671

Parent Item: D2807-041

Parent Item Name: Door prop

Start Date: 5/16/2011 **Required Date:** 5/20/2011

Start Qty: 20.00 **Required Qty:** 20.00

Comments: IPP: D□ 07.11.12 ecn1019, replaces D2807□ EC□verified by DD
IPP Rev:E 08-02-12 ECN 1111 DD verified by: ec

Component Item ID/ Item Name	Replacement Item ID	Mfg/ Purch	Bin Item	Primary Location	Last Location	Route Seq ID	Unit of Measure	Qty on Hand	Qty per Kit	Total Qty	Qty Issued	Date Issued	Status
D3671-1		Manufactured	No			110	Each	6.0000	1	20			
Placard													
				Location			**Loc Qty**		**Loc Code**				
				GA			6						
					68630		6			6			
6/15-164/50-115N		Purchased	No			130	Each	0.0000	1	20			
Gas Spring													

11/05/24

B69680 (14)

Ru 10/19 (20)

Dart Aerospace Ltd

W/O:		WORK ORDER CHANGES						
DATE	STEP	PROCEDURE CHANGE		By	Date	Qty	Approval Chief Eng / Prod Mgr	Approval QC Inspector

Part No: _____ **PAR #:** _____ **Fault Category:** _____ **NCR:** Yes No **DQA:** _____ **Date:** _____

Resolution: _____ **Disposition:** _____ **QA: N/C Closed:** _____ **Date:** _____

NCR:		WORK ORDER NON-CONFORMANCE (NCR)							
DATE	STEP	Description of NC Section A	Corrective Action Section B				Verification Section C	Approval Chief Eng	Approval QC Inspector
			Initial Chief Eng	Action Description Chief Eng		Sign & Date			

NOTE: Date & initial all entries

SPECIFICATION CONTROL DRAWING

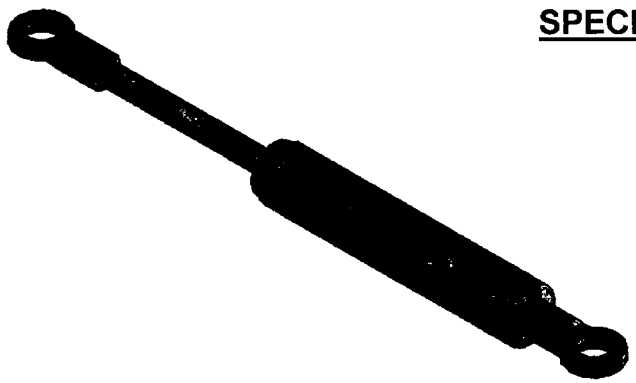

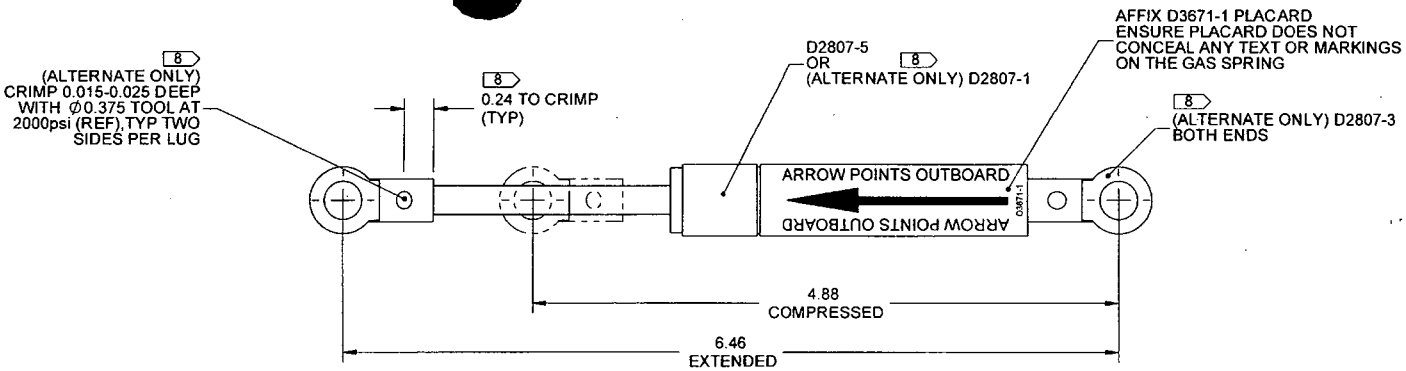

D2807-041 GAS SPRING

RELEASED

D2807-041 GAS SPRING ASSEMBLY PARTS LIST

QTY -041	PART NUMBER	DESCRIPTION
X	D2807-041	GAS SPRING ASSEMBLY
1	D2807-5	GAS SPRING
1	D3671-1	PLACARD

CL 11/05/16
W10: 69671

NOTES:
1) MATERIAL: N/A
2) FINISH: N/A
3) TOLERANCES: PER DART QSI 018 UNLESS OTHERWISE NOTED
4) UNITS: INCHES UNLESS OTHERWISE NOTED
5) BREAK SHARP EDGES: N/A
6) IDENTIFICATION: N/A
7) WEIGHT: 0.169 LBS
8) ALTERNATE PART: D2807-5 CAN BE MADE FROM ASSEMBLING D2807-1 (1) AND D2807-3 (2) (WEIGHT: 0.176 LBS) E

REV.	DESCRIPTION	BY	DATE
E	ADD D2807-5 GAS SPRING; D2807-1/-3 ASSEMBLY IS AN ALTERNATE TO D2807-5 GAS SPRING; UPDATE DIMENSIONS ON D2807-3	PH	07.12.28
D	ADDED D3671-1 PLACARD ADDED -041 ASSEMBLY UPDATED DWG	DC	07.09.27
C	CHANGE SPRING TO SS, ADD -3 LUG	CP	05.05.25
B	ADD FINISH	CP	05.03.16
A	NEW ISSUE	DS	00.11.03

DESIGN	
DRAWN	
CHECKED	
MFG. APPR.	
APPROVED	
DE APPR.	
DATE	07.12.28

DART AEROSPACE LTD
HAWKESBURY, ONTARIO, CANADA

DRAWING NO. D2807 — REV. E — SHEET 1 OF 3
TITLE: GAS SPRING — SCALE: NTS

COPYRIGHT © 2000 BY DART AEROSPACE LTD
THIS DOCUMENT IS PRIVATE AND CONFIDENTIAL AND IS SUPPLIED ON THE EXPRESS CONDITION THAT IT IS NOT TO BE USED FOR ANY PURPOSE OR COPIED OR COMMUNICATED TO ANY OTHER PERSON WITHOUT WRITTEN PERMISSION FROM DART AEROSPACE LTD

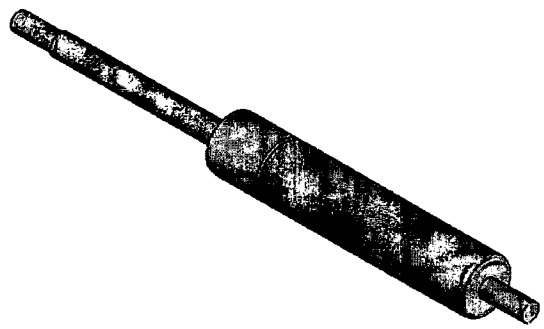

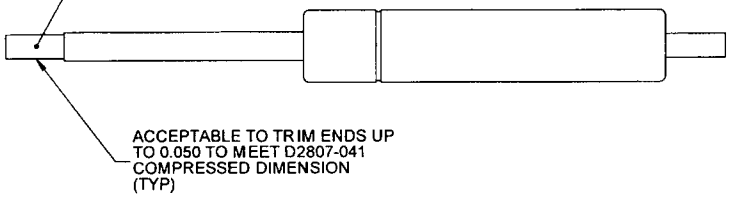

D2807-1 GAS SPRING
SCALE 1:1

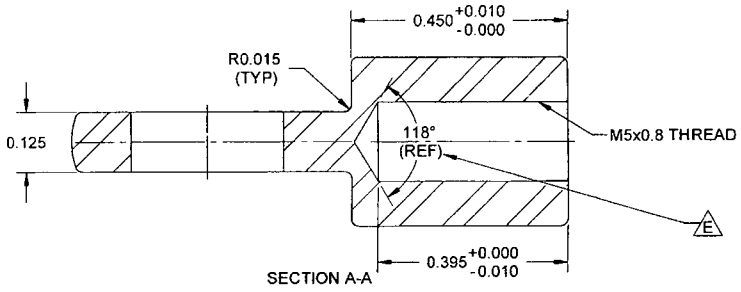

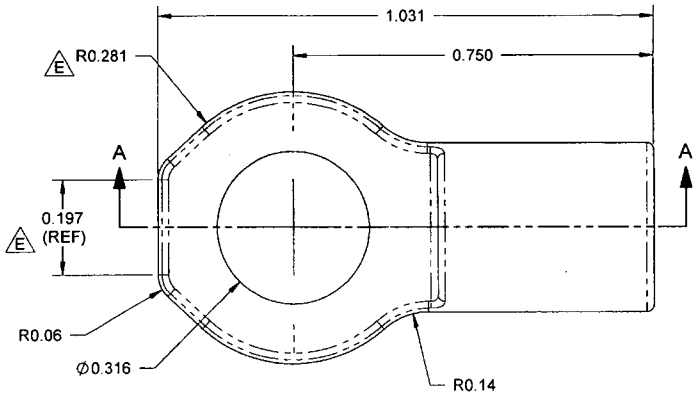

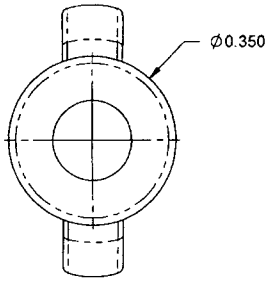

D2807-3 LUG

D2807-1 GAS SPRING NOTES:
1) POSSIBLE SUPPLIER: ARVINMERITOR MOTION CONTROL SYSTEMS, LEICESTER, UK
(P/N SXF6S6050080S6L-115N)
(REF: 80MM LONG CYLINDER, 50MM STROKE, 115N LOAD)
2) FINISH: NONE
3) TOLERANCES: PER DART QSI 018 UNLESS OTHERWISE NOTED
4) UNITS: INCHES UNLESS OTHERWISE NOTED
5) BREAK SHARP EDGES: N/A
6) IDENTIFICATION: N/A
7) WEIGHT: 0.144 LBS
8) SPECIFICATION: SS GAS SPRING
ACCEPTABLE LOAD RANGE IS 25 LB (115 N) MIN TO 45 LB (200 N) MAX
M5x0.8 THREADS

D2807-3 LUG NOTES:
1) MATERIAL: AISI 303 ROUND BAR (REF. DART SPEC. M303R)
2) FINISH: NONE
3) TOLERANCES: PER DART QSI 018 UNLESS OTHERWISE NOTED
4) UNITS: INCHES UNLESS OTHERWISE NOTED
5) BREAK SHARP EDGES: 0.010 TO 0.015
6) IDENTIFICATION: N/A
7) WEIGHT: 0.016 LBS

DESIGN	AH	**DART AEROSPACE LTD** HAWKESBURY, ONTARIO, CANADA
DRAWN	AH	
CHECKED		DRAWING NO. D2807 — REV. E — SHEET 2 OF 3
MFG. APPR.		
APPROVED		TITLE: GAS SPRING — SCALE 4:1
DE APPR.		
DATE	07.12.28	

COPYRIGHT © 2000 BY DART AEROSPACE LTD
THIS DOCUMENT IS PRIVATE AND CONFIDENTIAL AND IS SUPPLIED ON THE EXPRESS CONDITION THAT IT IS NOT TO BE USED FOR ANY PURPOSE OR COPIED OR COMMUNICATED TO ANY OTHER PERSON WITHOUT WRITTEN PERMISSION FROM DART AEROSPACE LTD.

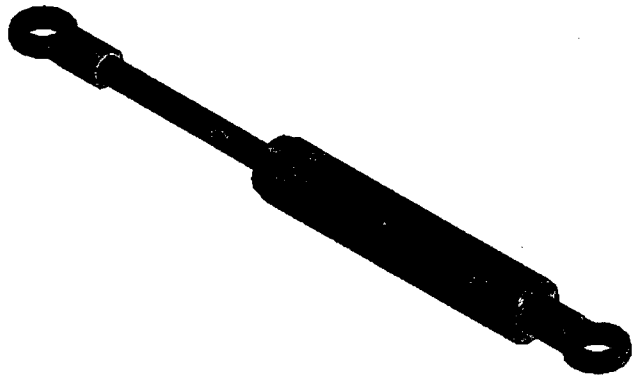

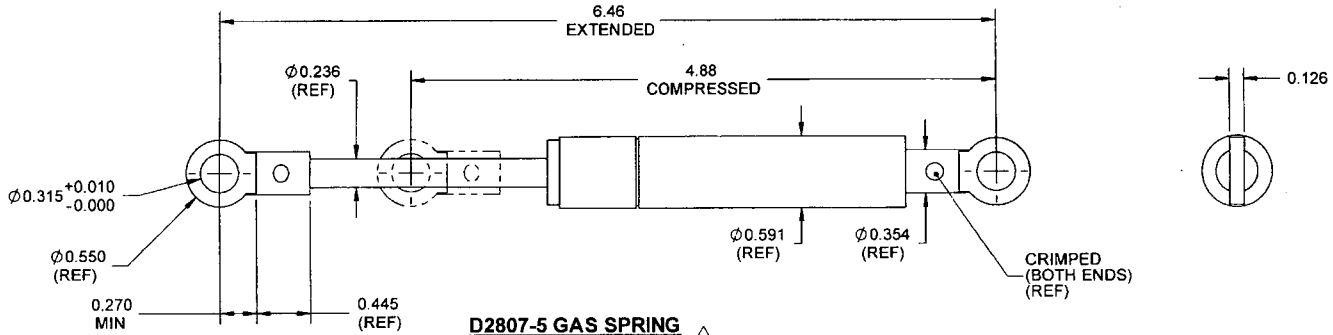

D2807-5 GAS SPRING E

RELEASED 08.02.12

D2807-5 GAS SPRING NOTES:
1) POSSIBLE SUPPLIER: LIFT SUPPORT TECHNOLOGIES, SASKATOON, CANADA
(P/N 6/15-164/50-115N)
2) FINISH: N/A
3) TOLERANCES: PER DART QSI 018 UNLESS OTHERWISE NOTED
4) UNITS: INCHES UNLESS OTHERWISE NOTED
5) BREAK SHARP EDGES: N/A
6) IDENTIFICATION: N/A
7) WEIGHT: 0.169 LBS
8) SPECIFICATION: SS GAS SPRING WITH END FITTINGS,
ACCEPTABLE LOAD RANGE 25 LB (115 N) MIN TO 45 LB (200 N) MAX

DESIGN	PH	**DART AEROSPACE LTD** HAWKESBURY, ONTARIO, CANADA
DRAWN	PH	
CHECKED		DRAWING NO. D2807 — REV. E — SHEET 3 OF 3
MFG. APPR.		
APPROVED		TITLE: GAS SPRING — SCALE 4:1
DE APPR.		
DATE	07.12.28	

COPYRIGHT © 2000 BY DART AEROSPACE LTD
THIS DOCUMENT IS PRIVATE AND CONFIDENTIAL AND IS SUPPLIED ON THE EXPRESS CONDITION THAT IT IS NOT TO BE USED FOR ANY PURPOSE OR COPIED OR COMMUNICATED TO ANY OTHER PERSON WITHOUT WRITTEN PERMISSION FROM DART AEROSPACE LTD

Dart Aerospace Ltd.
1270 Aberdeen Street
Hawkesbury, ON K6A 1K7
Tel: 613 632 9577
Fax: 613 632 1053

PO REPRINT

Purchase Order ID PO14069

Purchase Order Date 5/11/2011
PO Print Date 5/16/2011

Order From : VC-LST0001

LS TECHNOLOGIES INC.
303-103 STREET
SASKATOON, SK S7N 1Y9
CA

Contact Name		**Buyer**	Chantal Lavoie
Vendor Phone	306 683 5000	**Requisition Nbr**	
Vendor Fax	306 683 6403	**Tax Resale Nbr**	10127-2607
Vendor Account Nbr		**Terms**	Net 30
		Currency	CAD
		FOB	Destination-Collect

Ship To : DART AEROSPACE LTD 1270 ABERDEEN
HAWKESBURY, ON K6A 1K7
CANADA

CX 11/05/11

Line Nbr	Reference / Revision ID / Vendor Part Number	Description/ Mfg ID	Req Date/ Taxable	Req. Qty/ Unit of Measure	Ship Method	Unit Price	Extended Price
1	BS104	BALL STUD	5/20/2011 Yes	12.00 Each	FedEx PI collect	$1.1200	$13.44
		Special Inst:	AS PER DWG D3554 REV.A B69496				
2	6/15-164/50-115N	Gas Spring	5/20/2011 Yes	20.00 Each	FedEx PI collect	$63.9000	$1,278.00
		Special Inst:	AS PER DWG D2807 REV. E B69671				
3	B6-220-530-140N	Door Prop	5/20/2011 Yes	10.00 Each	FedEx PI collect	$36.8500	$368.50
		Special Inst:	AS PER DWG D3552 REV. G B69668				
4	B8-154-387-156N	Gas Spring	5/20/2011 Yes	12.00 Each	FedEx PI collect	$26.5000	$318.00
		Special Inst:	AS PER DWG D3552 REV. G B69670				

Lift Support Technologies

303 – 103rd Street, Saskatoon, Saskatchewan, Canada S7N 1Y9
Ph: (306) 683-5000 Fax: (306) 683-6403

Certificate of Compliance

This is to certify that the parts listed below meets specifications as required by your order.

12 Units : BS104 .39 DIA BALL STUD ZINC PLATED
5/16-18 THREAD .75 LENGTH W/Locknut

20Units: D2807 Stainless Gas Spring (6/15-164/50-115N)

10 Units: B6-220-530-140N Carbon Steel Gas Spring

12 Units: B8-154-387-156N Carbon Steel Gas Spring

12 Units: B8-154-387-060N Carbon Steel Gas Spring

Country of Manufacture: Canada
Date of Manufacture : May 2011
This product is ROHS compliant.

We certify no mercury was used in the manufacture of this order.

Purchase Order # 14069
Invoice # 7288

L S Technologies Inc Canada

Nolan Fehr
Manager

LS Technologies Canada Inc.

303 - 103 Street
Saskatoon, SK Canada
S7N 1Y9

Packing Slip

Date	Invoice #
5/16/2011	7288

Name / Address
Dart Aerospace Ltd 1270 Aberdeen St. Hawkesbury, ON K6A 1K7

Ship To
Main Finished Goods Location Dart Aerospace Ltd 1270 Aberdeen St. Hawkesbury, ON K6A 1K7

P.O. No.	Ship	Via	FOB	Project
14069	5/16/2011	Fed-Ex		

Qty	Description
12	BS104 - ~~10mm Ball Stud Zinc~~ 5/16-18 Thd .75" Lg with Locknut
20	~~D2807~~ Stainless Gas Spring (6/15-D64/50-115N)
10	~~B6-220-530-140N~~ Gas Spring
12	B8-154-387-156N Gas Spring
12	B8-154-387-60N Gas Spring
	Shipping Via FED EX Tracking # 797101196445